Note on the ESP32 D1 Mini boards
There are many clones out there, which can have the following drawbacks:
- The voltage regulator (the small 5 pin package) with "4B2K" marking is not working (boot issues), if voltage is above about 5.25V! Working replacements: MIC5205-3.3 "KB33", LP2985AIM5-3.3 "LORA"
- Boards with this regulator are working (tested up to 6.5V supply voltage): "S2VG"
- some boards come without USB port protection diode (on the top left side of the USB connector), just with a 0 Ohm resistor (marked with "0"). This can damage your computer, if the controller is supplied with an ESC / BEC above 5V and connected to the USB port at the same time!!
- The PCB thickness is not alwaays the same, so 2 different housing versions are required

3 Pin I / O headers

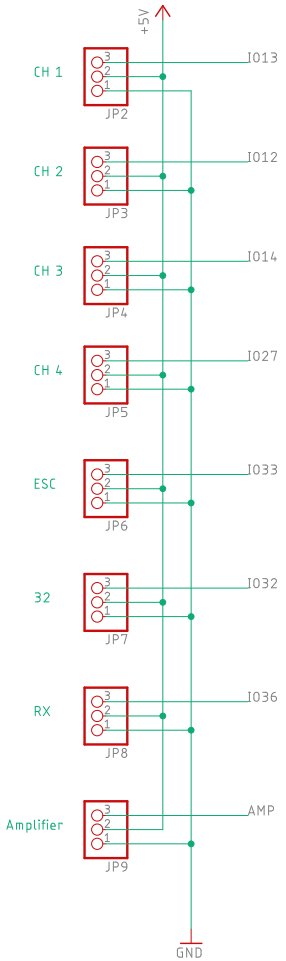

Optional filter capacitors

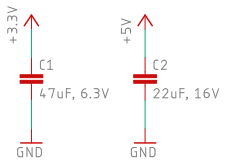

These capacitors are optional
The controller will also work without them, but may be less stable!

Optional battery monitor

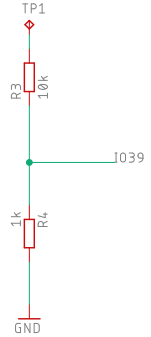

Resistors only required, if you want to measure the battery voltage, using "#define BATTERY_PROTECTION"

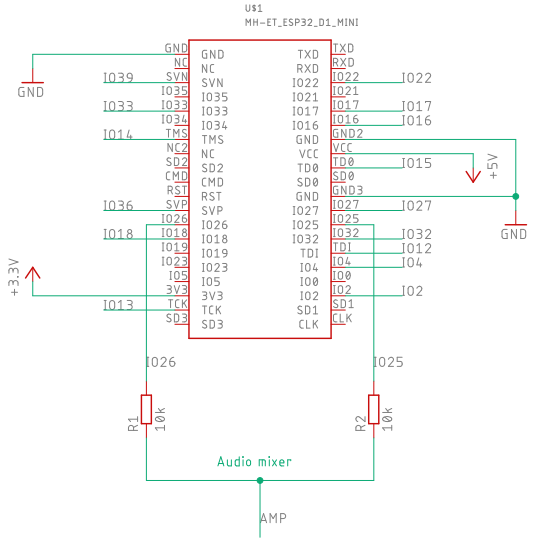

R1 & R2 resistors only required, if you want to connect an audio amplifier

Light outputs (comon positive)
Always use series resistors according to:
https://www.digikey.de/en/resources/conversion-calculators/conversion-calculator-led-series-resistor

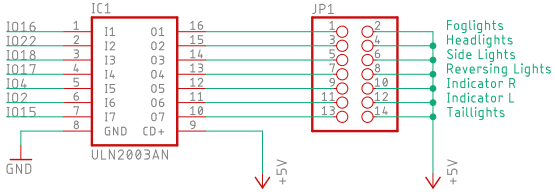

General notes:
- This controller does not have a reverse polarity protection
- Disconnect the battery before wiring anything
- Double check the wiring before re connecting the battery
- The input supply range is 5 - 6V (5V is recommended) If a PAM8403 amplifier is used: 5V only!

open hardware

This controller is able to run the following software:
https://github.com/TheDIYGuy999/Rc_Engine_Sound_ESP32
https://github.com/TheDIYGuy999/wirelessTrailerESP32web

Manuals and pre compiled software:
https://thediyguy999.github.io/TheDIYGuy999_ESP32_Web_Flasher/flash.html

Besides every standard "crawler mode" ESC, it can also be used with this ESC:
https://www.pcbway.com/project/shareproject/RZ7886_based_ESC_for_ESP32_Sound_and_Light_Controller_f8f4a805.html

TheDIYGuy999	
TITLE: ESP32 RC Trailer	
Document Number:	REV: v1.1
Date: 06.05.23 15:46	Sheet: 1/1